Instruction Manual & Parts Catalog

U.S. Billiards

VIDEO POOL

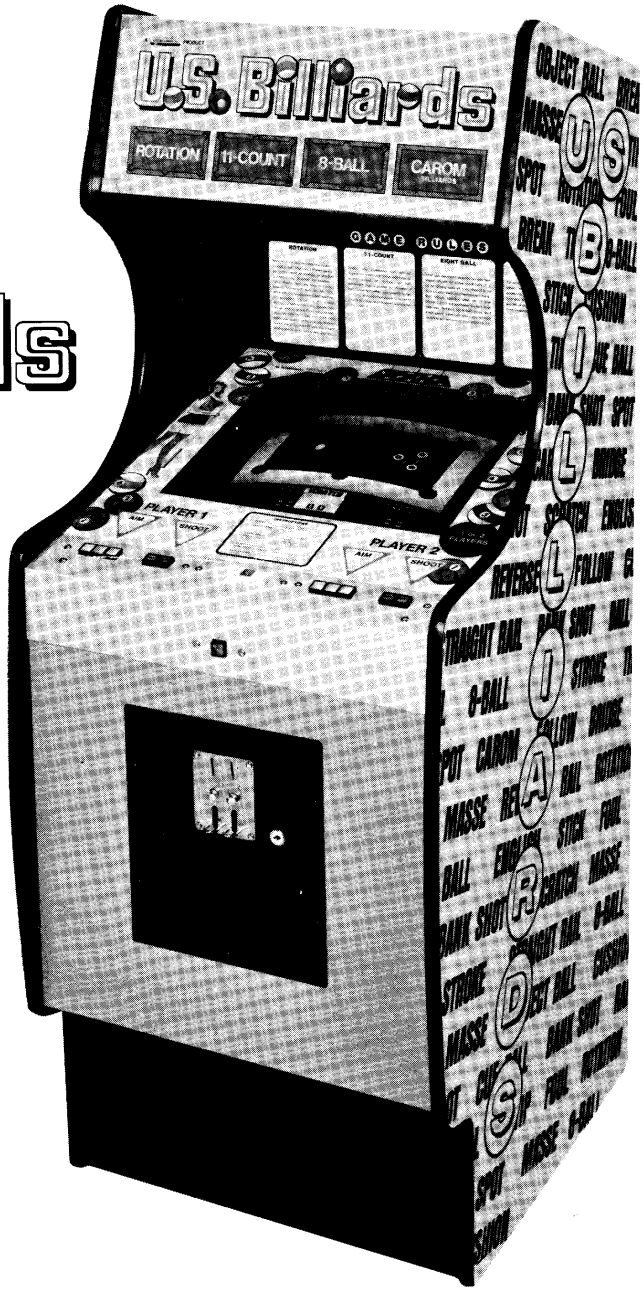

U.S. Billiards, Inc.

243 DIXON AVENUE ▪ AMITYVILLE, N. Y. 11701 ▪ (516) 842-4242

A. COMPONENT REMOVAL INSTRUCTIONS

1. TO REMOVE P.C. LOGIC BOARD

Open rear door (power will automatically go off by action of "California Switch") and remove the 2 screws that hold the wooden bracket to the small logic board. Disconnect the edge connector at the far side of the large P.C. board and both logic boards will now slide out of the wooden receiver.

2. TO REMOVE 5 VOLT POWER SUPPLY ASSEMBLY

Disconnect AC cord from outlet and open rear door. The power supply is located at the back right side. Unsolder the Red and Black wires at the top of the unit (left terminal is + Red wire, right terminal is — Black wire). Remove protective plastic cover under which the fuse block and barrier terminal strip are located. Disconnect the 6 wires on the right side of the barrier terminal strip. Remove the 6 screws that secure the complete board assembly to the cabinet. Unsolder the 2 wires going to the California door switch (common and N.O.). Unit can now be completely removed from cabinet.

3. TO REPLACE FUSES

There are a total of 5 fuses in this game. To insure extra reliability and protection of components, 3 fuses are on the Motorola monitor. Two of these are 1 amp Slow-Blow type located at the lower left side of the monitor. The other fuse is a 7 amp Slow-Blow type and is soldered to the terminal strip between the monitor power transformer and the circuit board. The remaining 2 fuses are located under the protective plastic cover on the power supply assembly (back right side of the cabinet). These are 2 amp and 5 amp Slow-Blow fuses. **CAUTION** — *UPON REPLACING ANY FUSE, MAKE CERTAIN THE CORRECT FUSE VALUE IS USED OR DAMAGE TO COMPONENTS MAY OCCUR.*

4. TO REMOVE TV MONITOR

Open rear door and disconnect harness connector at lower left corner of the monitor. Remove 2 screws on metal shipping bracket which is located on the right hand side toward the rear and under the monitor mounting panel. TV mounting panel will now slide out.

5. TO REMOVE FRONT SWITCH PANEL

Remove AC cord from power and open the front door. Reaching in from the door there is a single wing nut at each end of the switch panel. Remove the nut and the panel will lift straight up and out of the groove. On

the left side of the panel there is a connector to disconnect. On the right side, reach down approximately one foot to disconnect a connector on that side. The panel can now be removed from the game. **To change lamps** in the switches, grasp the black lens body portion of the switch on the back side of the panel and push forward firmly. The lamp will now be in view and can be removed by gently grasping with pliers and pulling forward. Should the engraved lens need to be removed, simply push it out from the ***rear*** of the black lens body. Re-insert from the front. To remove one of the sets of switches, remove the screws securing the switch assembly bracket to the panel, pull off the black lens body, remove the "C" clip, spring and black spacer on front of the switch. Bend back the bracket tabs upward and remove switch from rear of the bracket.

6. TO REMOVE PLASTIC PLAYFIELD FROM CABINET

Remove AC cord from power and open front door. Reaching in from the door there is a single wing nut at each end of the switch panel. Remove the nut and lift the panel straight up and out of the groove. From under the playfield panel, gently push up and pull toward you.

7. TO REMOVE HEADER LIGHT PANEL AND SHADOW BOX

To replace header lights, fluorescent and speaker, first unplug AC power, then remove the 4 slotted screws on the top of the cabinet. Remove the upper aluminum "L" bracket and lift the plastic header screen straight up. The game select lamps and fluorescent are now visible. To replace speaker, gently tilt top of shadow box forward and out, enabling access to the speaker.

B. ADJUSTMENTS

1. TO ADJUST TV MONITOR

From the rear of the cabinet, the various controls are facing down. From left to right they are: Contrast, Brightness, Vertical Hold, Horizontal Hold and Volume.

2. TO ADJUST EXTERNAL 5 VOLT POWER SUPPLY

The power supply, located in the lower right corner of the cabinet, as viewed from the rear, is the +5V source for the logic board. This supply is adjusted at the factory. However, if flickering of the balls or rolling of the playfield is experienced, then turn the potentiometer, on the top of the supply, slightly counterclockwise. Recheck and adjust in this manner.

3. RESETTING OF THE LOGIC BOARD

On initial power turn on, a hum will be heard for approximately

3 seconds. Should this hum continue, then unplug power and re-insert. Continue until hum disappears after 3 seconds. This insures that the logic board has reset and is synchronized.

4. GAME ADJUSTMENT

Located on the large logic board toward the harness edge connector (far end as viewed from the rear of the cabinet) are 2 slide switches. The position of these switches determines the amount of time the game will play. See chart below for adjustments and time. (Switch 1 is on the right as viewed from the rear. **UP** designates toward the front of the cabinet).

TIME IN MINUTES			
		ONE COIN	TWO COINS
SWITCH	POSITION	1 PLAYER (40 PERIOD)	2 PLAYERS (90 PERIOD)
1 2	Down Down	1¼ Minutes	2¾ Minutes
1 2	Up Down	1¾ Minutes	3¾ Minutes
1 2	Down Up	2 Minutes	4½ Minutes
1 2	Up Up	2½ Minutes	5½ Minutes

Time is set at the factory as follows:

1 Player - one coin - 40 units of time + 2 minutes
2 Players - two coins - 90 units of time + 4½ minutes
(Switch 1 = Down, Switch 2 = Up)

5. WARNINGS

CAUTION: *The TV monitor in this game is a high voltage instrument. Extreme caution should be taken when any adjustment is performed while AC power is on. Such adjustments should be made only by qualified personnel.*

Do not, under any circumstances, attempt to service the small logic board (CPU board). Any IC's which are removed are automatically ruined and any tampering with the CPU board voids any and all warantees.

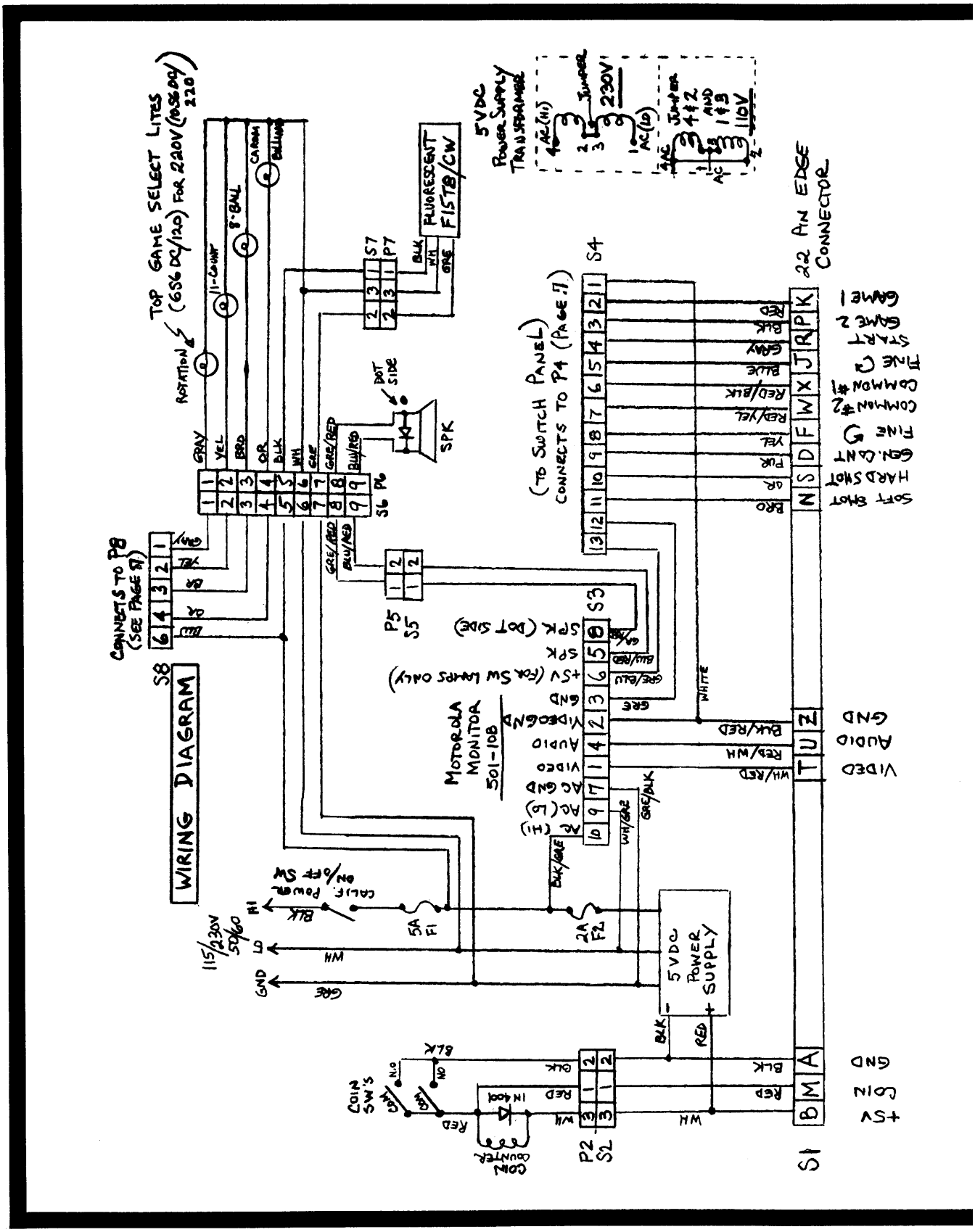
WIRING DIAGRAM
TOP GAME SELECT LITES (6S6 DC/120) FOR 220V (10S6 DC/220)
ROTATION
11-COUNT
8-BALL
CAROM
BILLIARD
FLUORESCENT F15T8/CW
5VDC POWER SUPPLY TRANSFORMER
JUMPER 230V
JUMPER 4&2 AND 1&3 110V
22 PIN EDGE CONNECTOR
(TO SWITCH PANEL) CONNECTS TO P4 (PAGE 7)
CONNECTS TO P8 (SEE PAGE 7)
DOT SIDE
SPK
MOTOROLA MONITOR 501-10B
SPK (DOT SIDE)
+5V (FOR SW LAMPS ONLY)
CALIF. POWER ON/OFF SW
115/230V 50/60
5VDC POWER SUPPLY
COIN SW'S
COIN COUNTER
1N4001
GAME 1
GAME 2
START
FINE
COMMON #1
COMMON #2
FINE
GEN. CONT
HARD SHOT
SOFT SHOT
GND
AUDIO
VIDEO
+5V
COIN
GND

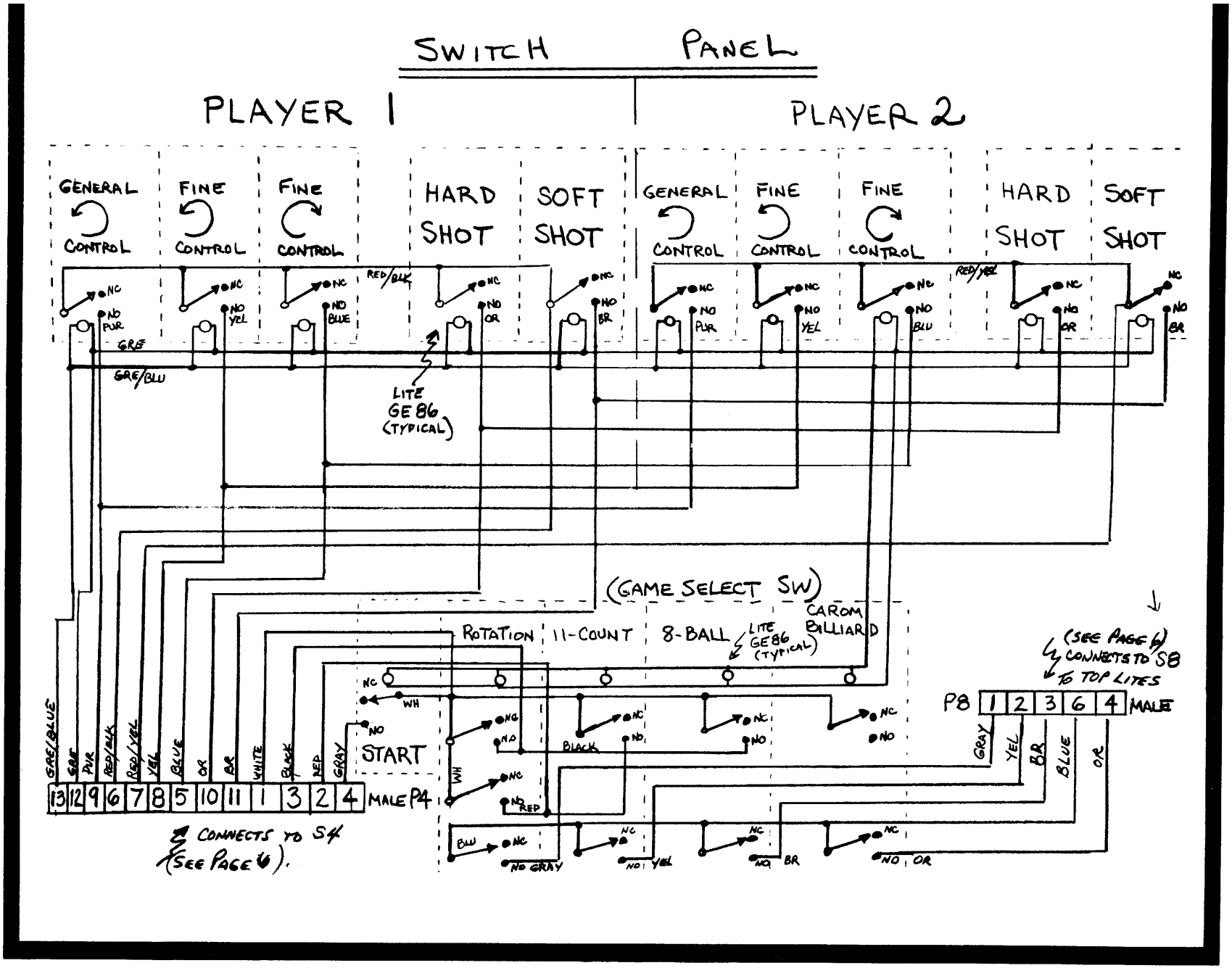
SWITCH PANEL
PLAYER 1
PLAYER 2
GENERAL CONTROL
FINE CONTROL
FINE CONTROL
HARD SHOT
SOFT SHOT
GENERAL CONTROL
FINE CONTROL
FINE CONTROL
HARD SHOT
SOFT SHOT
NC
NO PUR
NO YEL
NO BLUE
RED/BLK
NO OR
NO BR
GRE
GRE/BLU
LITE GE86 (TYPICAL)
(GAME SELECT SW)
ROTATION
11-COUNT
8-BALL
CAROM BILLIARD
LITE GE86 (TYPICAL)
NC
WH
NO
START
BLACK
NO RED
NO GRAY
BLU
NO GRAY
NO YEL
NO BR
NO OR
GRE/BLUE
GRE
PUR
RED/BLK
RED/YEL
YEL
BLUE
OR
BR
WHITE
BLACK
RED
GRAY
13 12 9 6 7 8 5 10 11 1 3 2 4 MALE P4
CONNECTS TO S4 (SEE PAGE 6).
(SEE PAGE 6) CONNECTS TO S8 TO TOP LITES
P8 1 2 3 6 4 MALE
GRAY
YEL
BR
BLUE
OR

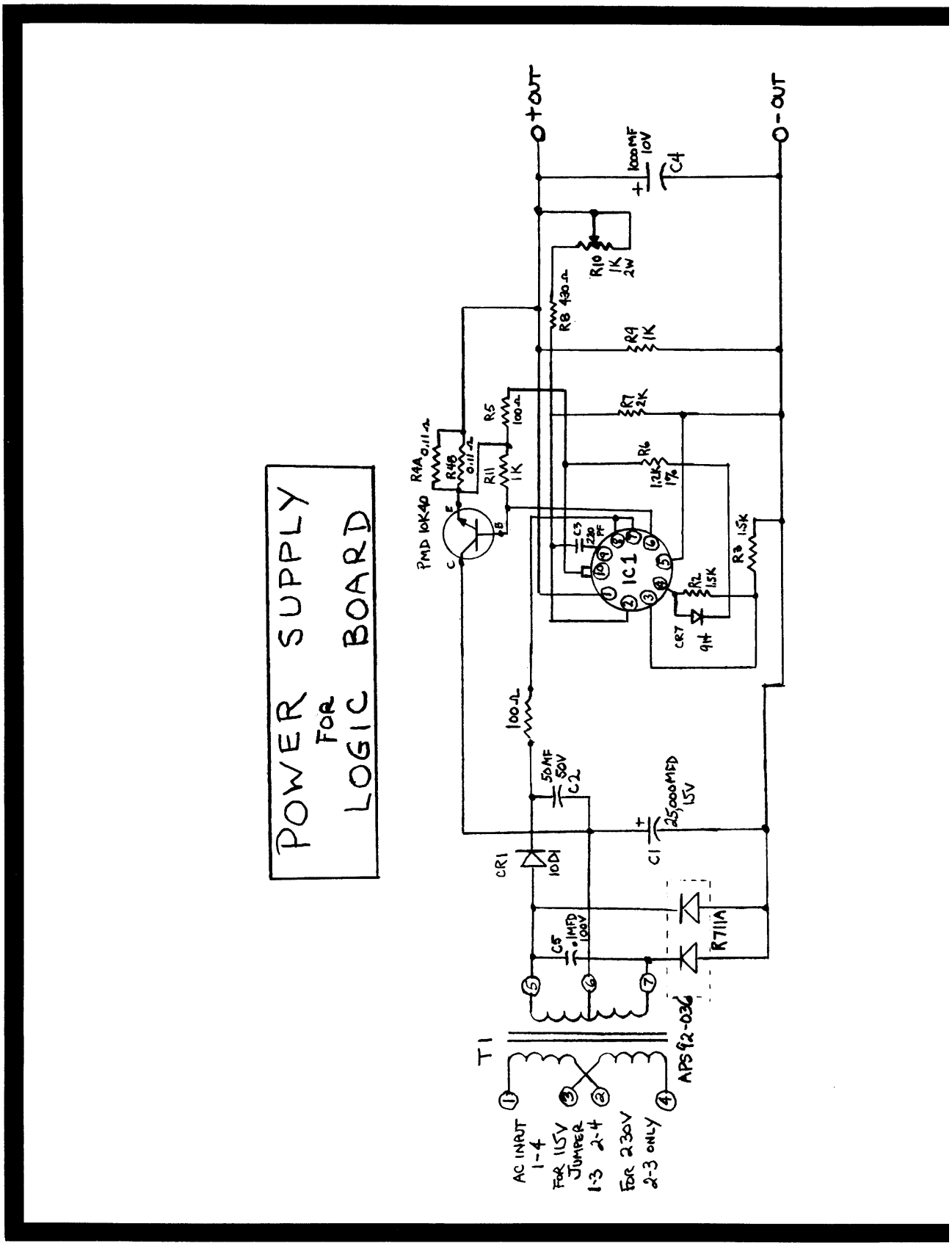
POWER SUPPLY
FOR
LOGIC BOARD
+OUT
-OUT
C4
1000MF 10V
R10 1K 2W
R8 430Ω
R9 1K
R7 2K
R6 1.2K 1%
R5 100Ω
R4A 0.11Ω
R4B 0.11Ω
R11 1K
PMD 10K40
C3 120 PF
IC1
R2 1.5K
R3 1.5K
CR7 9V
100Ω
50MF 50V C2
25,000MFD 15V
C1
CR1 100I
C5 .1MFD 100V
R711A
T1
APS92-036
AC INPUT 1-4
FOR 115V JUMPER 1-3 2-4
FOR 230V 2-3 ONLY

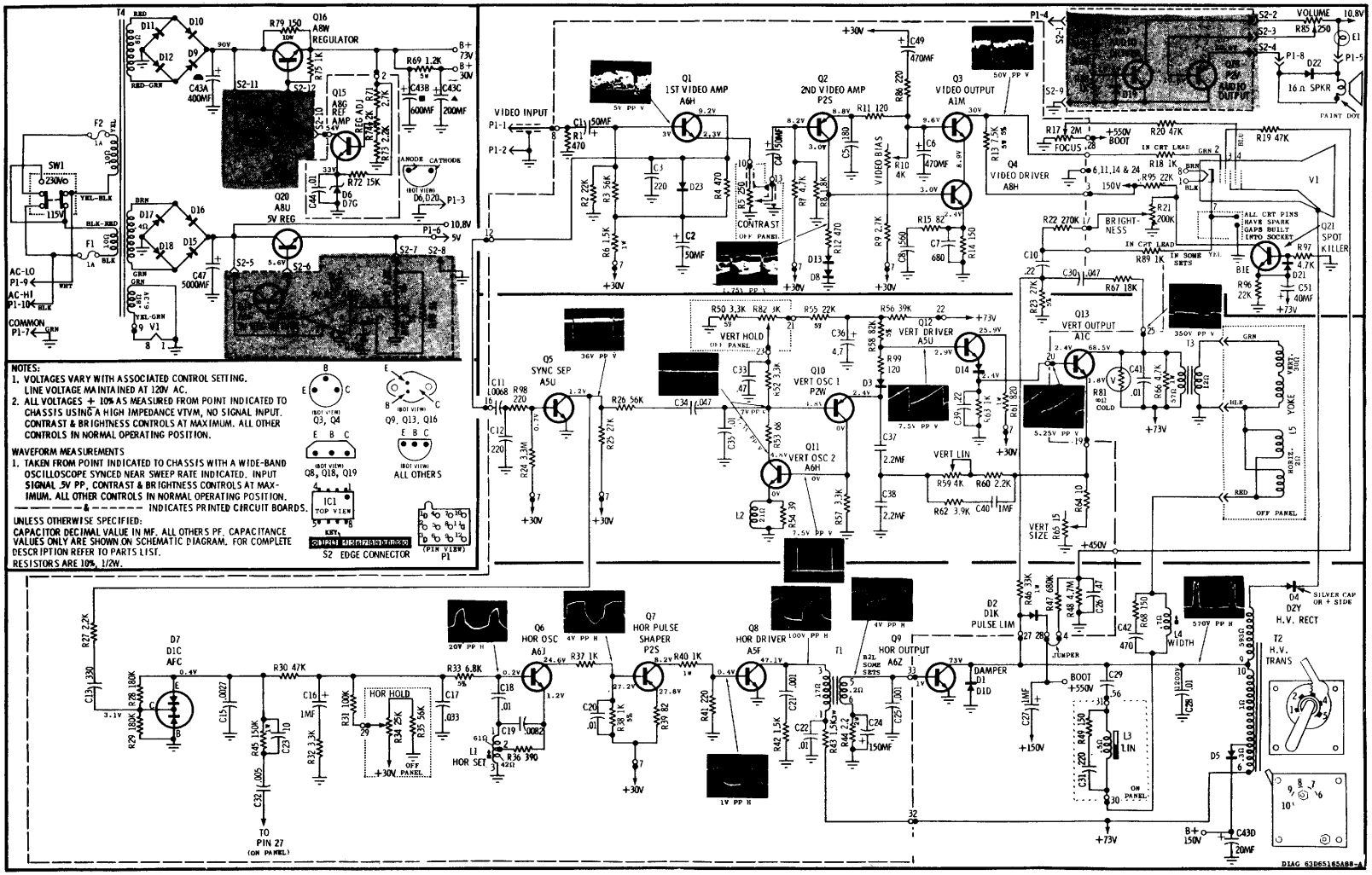

Motorola Monitor *Schematic Diagram* Model 501-10

PARTS LISTING

CABINET PARTS

522	Coin chute (2 x 25¢)
308	Cash door, frame with cash box
309	Cash box only for No. 308 door assembly
7002	Leg leveler - each
10128	Back service door
10124	Speaker screen
10100	TV screen mask - black plastic
10101	Header - plastic - screened
10102	Playing surface plastic - screened
10103	Playing surface plastic - grey
10104	Game rules - plastic - screened

METAL PARTS

10119	California switch bracket
10112	Header retainer bracket - aluminum (each)
10114	Aluminum control panel
10113	Switch assembly mounting - Z bracket
10121	Playing surface support bar - front
10120	Front panel hold down bracket
10106	Monitor retainer bar

TRIM

10129	Black T-moulding for one side - 15 feet

LOCKS

1486	Random lock with key and hardware
1487	No. 1150 lock with key and hardware

INSTRUCTIONS & LABELS

2920	Player 1 - TV screen label
2921	Player 2 - TV screen label
2919	1 Player - 25¢, 2 Player - 50¢ - metal plate
2922	Time left - TV screen label
2909	Fuse below cover label

ELECTRICAL PARTS

10148	Complete small logic board (CPU board)
10116	Complete large logic board (game board)
9030	Complete Motorola 19" TV monitor
10105	Power supply - 110 volt
10123	Power supply - 220 volt

ELECTRICAL PARTS (Continued)

10118	Fuse holder - dual
10130	Speaker - 16 ohm, 1.5 watts
10064	2 amp Slow-Blow fuse
1415	5 amp Slow-Blow fuse
2356	6 volt DC counter
10110	Fluorescent fixture, 18"
10111	Fluorescent bulb, 18" - 110 volt
10146	6 volt bulb for control switches
10147	Header game light bulb - 220 volt
8028	Header game light bulb - 110 volt
8027	Header game light socket

SWITCHES

10131	California switch
	AIM & SHOOT SWITCHES
10107	5 switch assembly - 3 aim, 2 shoot - complete with lights and engraved instruction lenses
	Individual aim and shoot switch components
10132	Switch mechanism
10133	Plastic body - black
10146	6 volt bulb
	Plastic lenses
10134	General control - orange counterclockwise
10135	Fine control - orange counterclockwise
10136	Fine control - orange clockwise
10137	Hard shot - green
10138	Soft shot - green
	GAME SELECTION SWITCHES
10108	4 switch assembly with lights and engraved instruction lenses
	Individual game selection switch components
10139	Switch mechanism
10133	Plastic body - black
10146	6 volt bulb
	Plastic lenses
10140	Rotation - red
10141	11-Count - yellow
10142	8-Ball - blue
10143	Carom Billiards - white
10109	START SWITCH
10144	Start switch mechanism only
10133	Start switch plastic body only
10145	Start switch plastic lens - start - red